Current part is item (11) on diagram. Available at www.oshkoshequipment.com

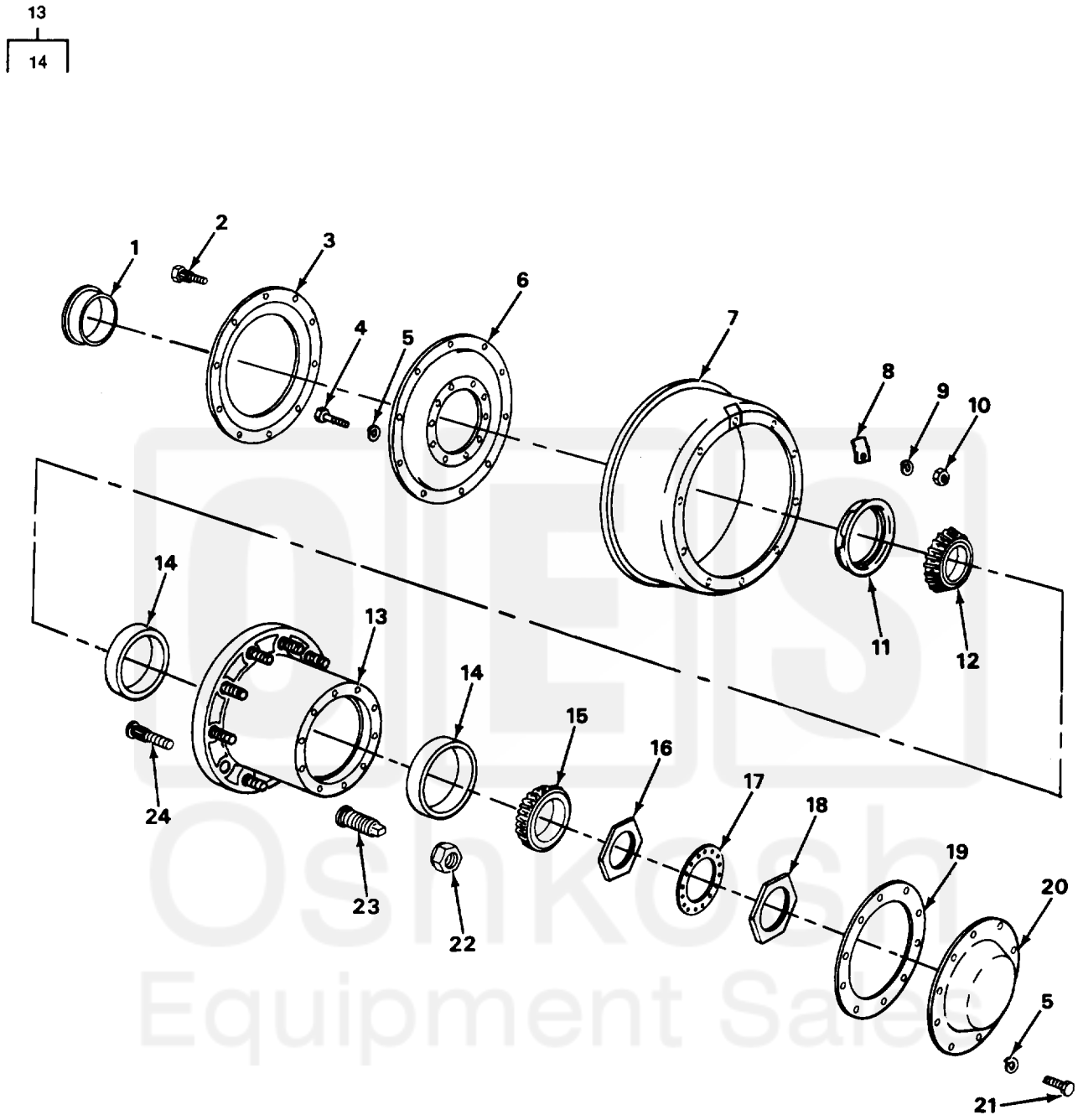

TA706120

FIGURE 38. HUB AND BRAKEDRUM ASSEMBLY (M127).

Current part is item (11) on diagram. Available at www.oshkoshequipment.com

Current part is item (11) on diagram. Available at www.oshkoshequipment.com

(1) ITEM NO	(2) SMR CODE	(3) CAGEC	(4) PART NUMBER	(5) DESCRIPTION AND USABLE ON CODES (UOC)	(6) QTY
				GROUP 13 WHEELS AND TRACKS	
				GROUP 1311 WHEEL ASSEMBLY	
				FIG. 38 HUB AND BREAKDOWN ASSEBMLY (M127)	
1	PAOZZ	19207	7409553	RING,WIPER UOC:260	2
2	PAOZZ	19207	7409389	BOLT,RIBBED SHOULDE UOC:260	20
3	PAOZZ	19207	7409556	DEFLECTOR,DIRT AND UOC:260	2
4	PAOZZ	19207	7521631	BOLT UOC:260	20
5	PAOZZ	88044	AN935-816	WASHER,LOCK UOC:260	40
6	XBOZZ	19207	7409388	ADAPTER UOC:260	2
7	PAOFF	19207	7409394	BRAKE DRUM UOC:260	2
8	PAOZZ	19207	7979315	COVER,ACCESS UOC:260	2
9	PAOZZ	96906	MS35338-47	WASHER,LOCK UOC:260	20
10	PAOZZ	96906	MS51968-11	NUT,PLAIN,HEXAGON UOC:260	20
11	PAOZZ	19207	7979349	SEAL,PLAIN ENCASED UOC:260	2
12	PAOZZ	19207	7409349	CONE AND ROLLERS,TA INNER UOC:260	2
13	PAOZZ	19207	7409395	HUB CAPS WHEEL WITH BEARING CUP UOC:260	2
14	PAOZZ	00447	428579	.CUP,TAPERED ROLLER INNER AND OUTER UOC:260	2
15	PAOZZ	19207	7411072	CONE AND ROLLERS,TA OUTER UOC:260	2
16	PAOZZ	19207	7979308	NUT,PLAIN,OCTAGON UOC:260	2
17	PAOZZ	19207	5139123	WASHER,KEY UOC:260	2
18	PAOZZ	19207	7346885	NUT,PLAIN,OCTAGON UOC:260	2
19	PAOZZ	19207	7979275	GASKET UOC:260	2
20	PAOZZ	78500	3262L90	COVER,ACCESS UOC:260	2
21	PAOZZ	96906	MS90728-113	SCREW,CAP,HEXAGON, H UOC:260	10
22	PAOZZ	96906	MS51983-4	NUT,PLAIN,SINGLE BA 1-1/8-16NF-2, (WHEEL STUD, RIGHT OUTER) RH THREADS UOC:260	10

Current part is item (11) on diagram. Available at www.oshkoshequipment.com